NOTES:

1. Installations depicted satisfy the requirements of the Florida Building Code, Building 8th Edition (2023) for design wind pressures and overall sizes noted.
2. Wood bucks, wood framing, steel stud framing, concrete and concrete masonry are by others and shall be designed by the architect or engineer of record to resist the loads imparted to them.
3. As-tested anchor locations shown on elevation. Reference specific substrate detail for actual spacing required for that substrate and associated anchor.
4. Wood buck strips and wood frames are assumed S-P-F (G=0.42) or denser. Buck width shall be greater than the window frame width. Tapered or partial width buck strips are not allowed.
5. Concrete masonry installations are assumed at least ASTM C90 normal weight hollow masonry units with a 1-1/4" wall thickness or normal weight concrete with a minimum compressive strength of f'c = 3,000 psi.
6. Metal stud frames are assumed to be a minimum 18 gauge 33 KSI steel.
7. Wood screws shall be corrosion resistant and meet the requirements of ANSI/ASME B18.6.1
8. Tapcon masonry anchors shall have a minimum embedment of 1-1/2" or full penetration of concrete masonry unit shell. They shall also have a minimum of 2" edge distance for concrete and 4" edge distance for concrete masonry. Install concrete masonry anchors per manufacturer's installation instructions.
9. TEKS screws shall be corrosion resistant and shall be ASTM A510 Grade 1018 or equivalent.
10. Maximum shim thickness of 1/4" permitted at each fastener location. Shims shall be non-compressible and load bearing type. Every fastener shall have a shim.
11. All interior and exterior perimeter surfaces of the window must be caulked.
12. Products are impact resistant and do not require approved protection devices if used in wind-borne debris regions.
13. Not for use in High Velocity Hurricane Zone (HVHZ).
14. See evaluation report for cross section details, hardware specifications, profile details and bill of materials.

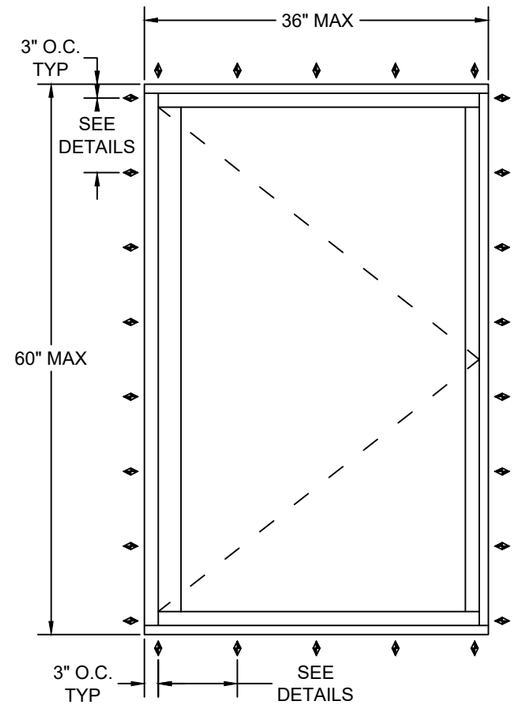

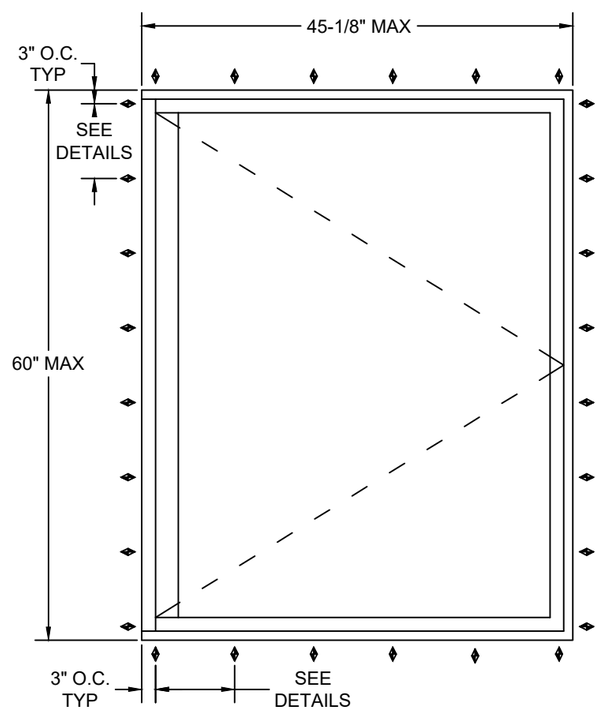

LIMITATIONS OF USE:

MAX SIZES AS NOTED

INSULATING GLASS
DP = +/- 70 PSF
MAX DLO: 30-1/8" x 54-1/8"

MONOLITHIC GLASS
DP: +/- 60 PSF
MAX DLO: 41-1/2" x 55-1/2"

MISSILE D, WIND ZONE 4

CONTENTS:

1/5- 2/5	ELEVATIONS AND NOTES
3/5-4/5	INSTALLATION DETAILS
5/5	GLAZING DETAILS

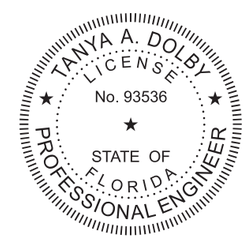

Digitally Signed by: Tanya Dolby

9/18/2025 8:05 AM

Tanya A. Dolby, PE
FL PE 93536
FL REG 29274
130 Derry Court
York, PA 17406
717-764-7700

Project S8002.01

Win Vent
Architectural Windows
2401 South Main Street
Fort Scott, KS 66701
www.winventwindows.com
Phone: (800) 295-3113
Fax: 620-223-1139

Contact Info

Customer

REVISIONS

DATE	NO.	DESCRIPTION	REV BY
	1	REVISED FOR 2020 FBC	JAR
7-18-25	2	REVISED FOR 2023 FBC	REM
	3		
	4		

Project Name
SERIES 600 FLORIDA PRODUCT APPROVAL

Supplier
Win-Vent Architectural Windows
2401 S. Main Street P.O. Box 430
Fort Scott, Kansas 66701

Elevations and Notes

DRAWN BY	WIN-VENT JOB #
JAR	N/A
DATE 01/18/21	SCALE NONE

SHEET 1 of 5

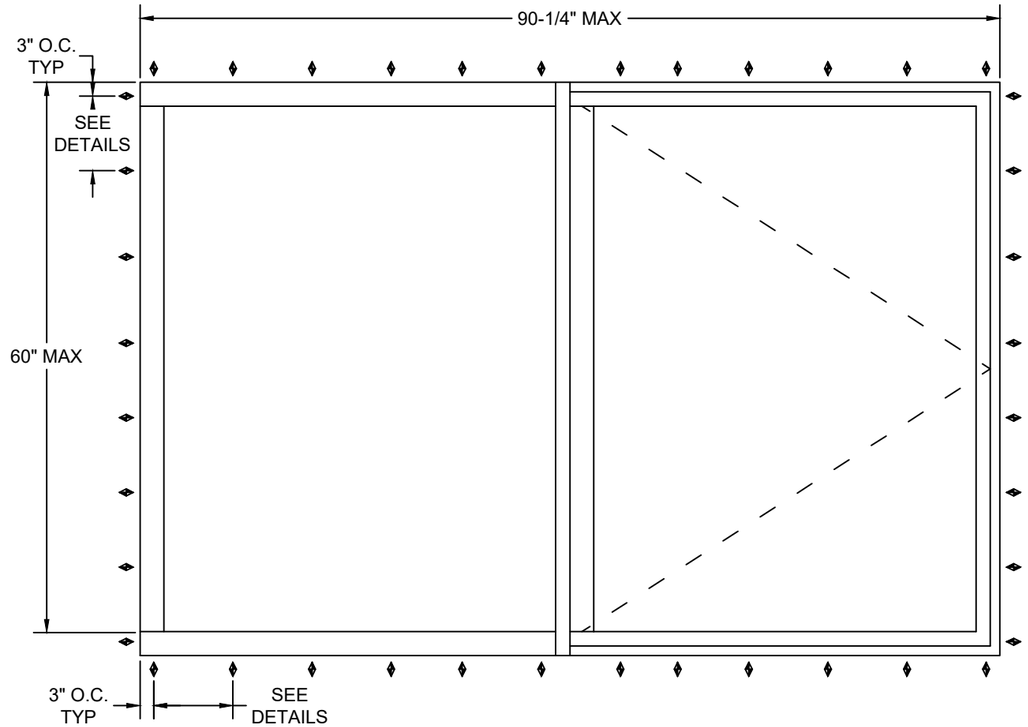

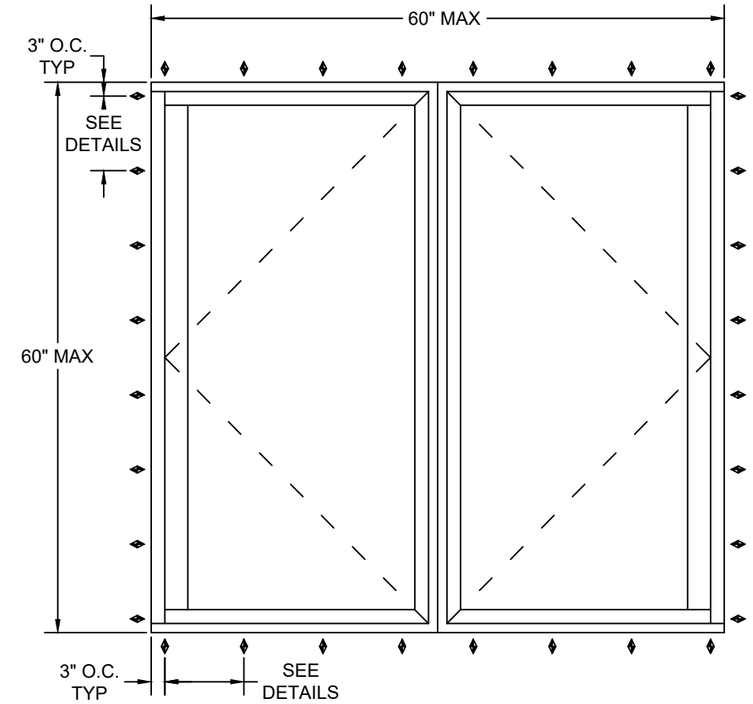

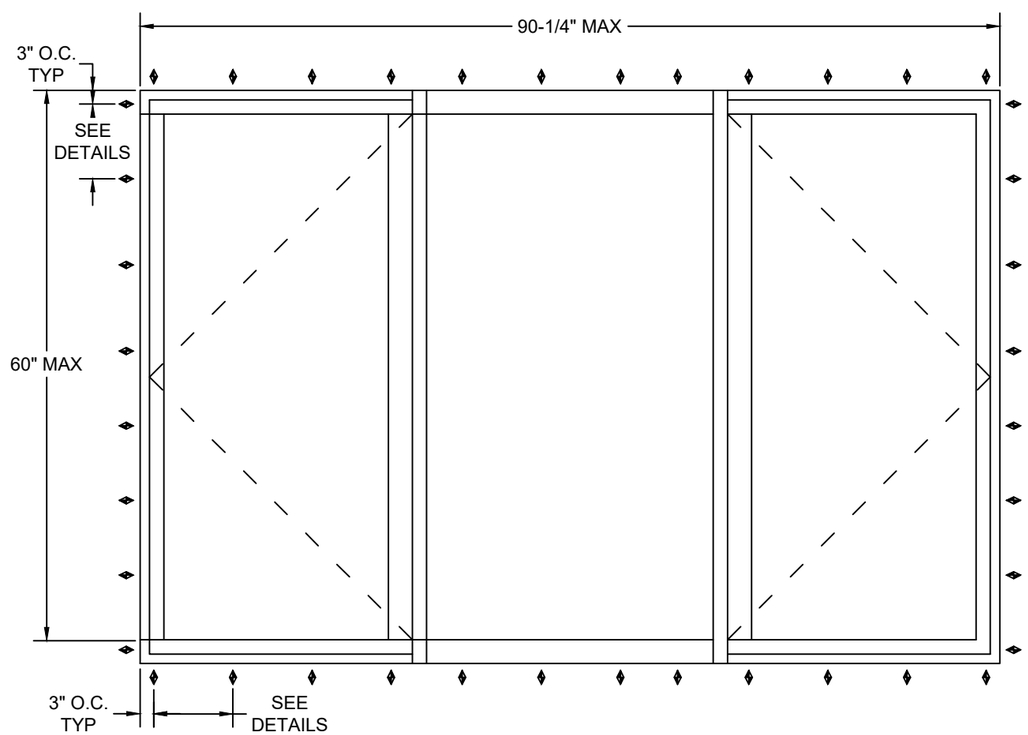

Win Vent
Architectural Windows

2401 South Main Street
Fort Scott, KS 66701
www.winventwindows.com
Phone: (800) 295-3113
Fax: 620-223-1139

Contact Info

Customer

REVISIONS

DATE	NO.	DESCRIPTION	REV BY
	1	REVISED FOR 2020 FBC	JAR
7-18-25	2	REVISED FOR 2023 FBC	REM
	3		
	4		

Project Name
SERIES 600 FLORIDA PRODUCT APPROVAL

Supplier
Win-Vent Architectural Windows
2401 S. Main Street P.O. Box 430
Fort Scott, Kansas 66701

Elevations and Notes

TANYA A. DOLBY
LICENSE
No. 93536
STATE OF
FLORIDA
PROFESSIONAL ENGINEER

Digitally Signed by: Tanya Dolby

9/18/2025 8:05 AM

Tanya A. Dolby, PE
FL PE 93536
FL REG 29274
130 Derry Court
York, PA 17406
717-764-7700

Project S8002.01

DRAWN BY	WIN-VENT JOB #
JAR	N/A
DATE	SCALE
01/18/21	NONE

SHEET
2 of 5

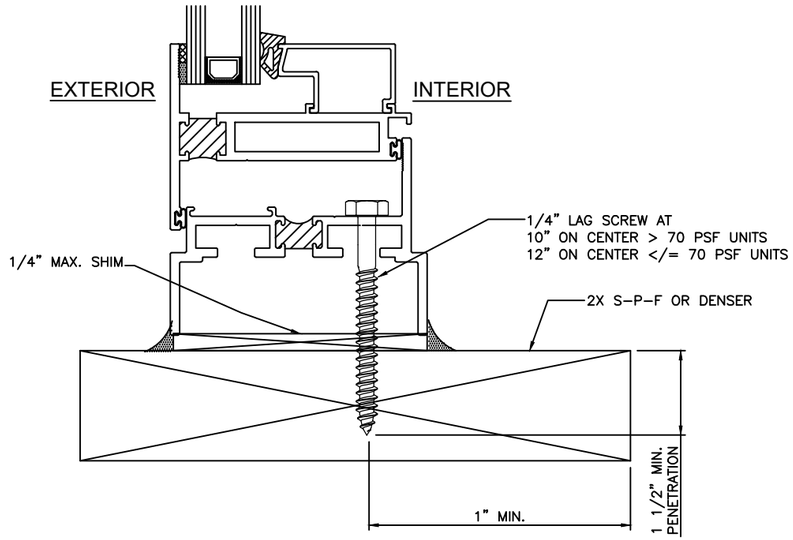

SECTION 1/1, 1/2 & 1/3
THROUGH FRAME TO
WOOD FRAMING OR BUCK

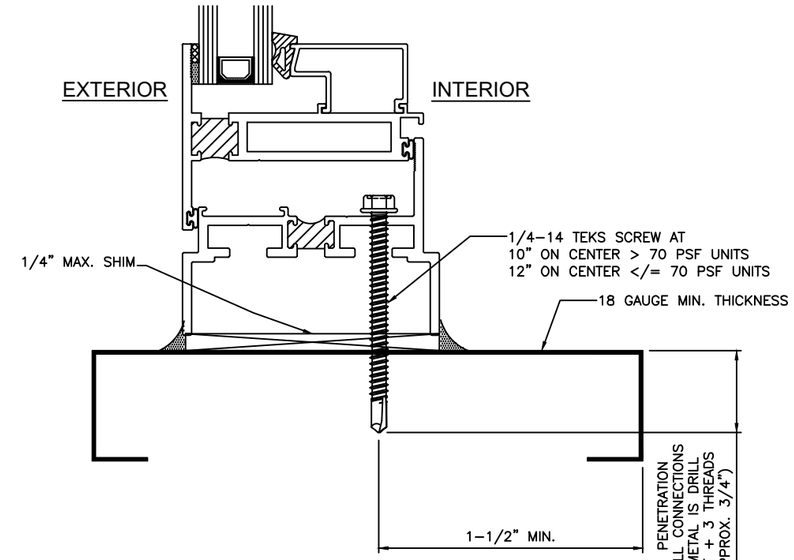

SECTION 1/1, 1/2 & 1/3
THROUGH FRAME TO
STEEL STUD

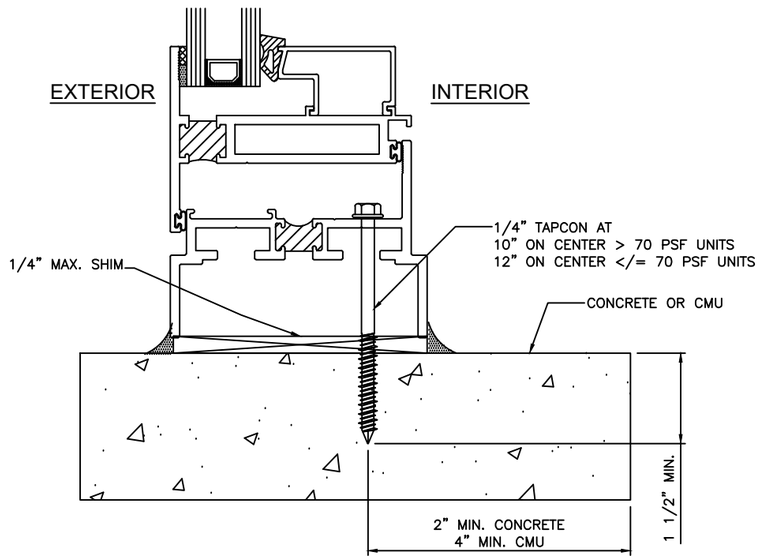

SECTION 1/1, 1/2 & 1/3
THROUGH FRAME TO CONCRETE
OR CMU

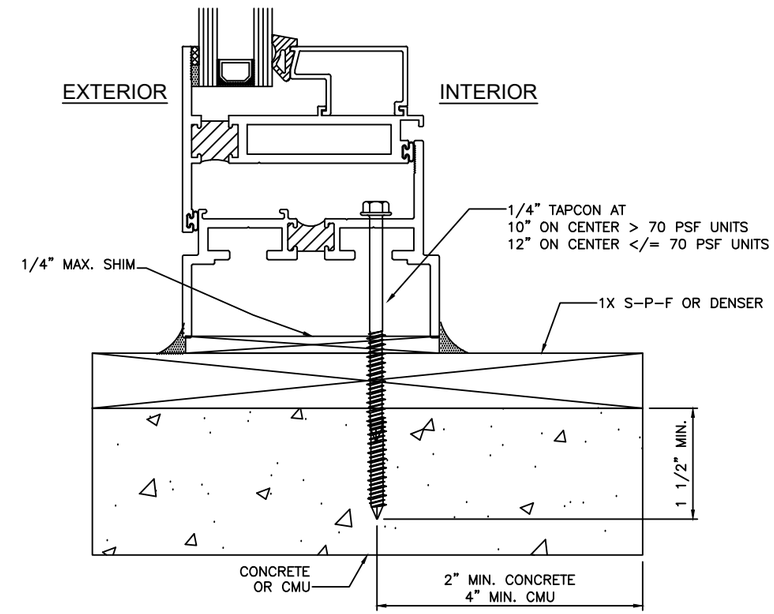

SECTION 1/1, 1/2 & 1/3
THROUGH FRAME TO CONCRETE
OR CMU WITH 1X BUCK STRIP

TANYA A. DOLBY
LICENSE
No. 93536
STATE OF
FLORIDA
PROFESSIONAL ENGINEER

Digitally Signed by: Tanya Dolby

9/18/2025 8:05 AM

Tanya A. Dolby, PE
FL PE 93536
FL REG 29274
130 Derry Court
York, PA 17406
717-764-7700

Project S8002.01

Win-Vent
Architectural Windows
2401 South Main Street
Fort Scott, KS 66701
www.winventwindows.com
Phone: (800) 295-3113
Fax: 620-223-1139

Contact Info

Customer

REVISIONS

DATE	NO.	DESCRIPTION	REV BY
	1	REVISED FOR 2020 FBC	JAR
7-18-25	2	REVISED FOR 2023 FBC	REM
	3		
	4		

Project Name
SERIES 600 FLORIDA PRODUCT APPROVAL

Supplier
Win-Vent Architectural Windows
2401 S. Main Street P.O. Box 430
Fort Scott, Kansas 66701

Installation Details

DRAWN BY	WIN-VENT JOB #
JAR	N/A
DATE 01/18/21	SCALE NONE

SHEET 3 of 5

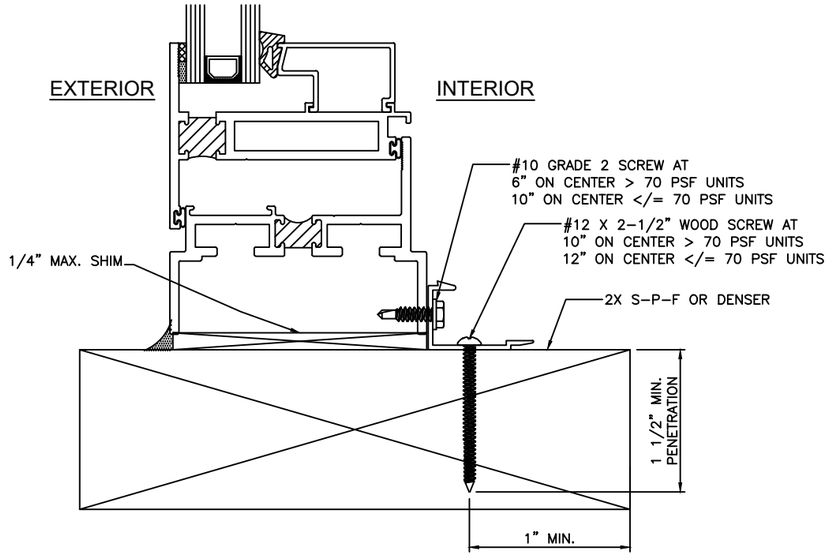

SECTION 1/1, 1/2 & 1/3
INSIDE CLIP & ANCHOR
TO WOOD FRAME OR BUCK

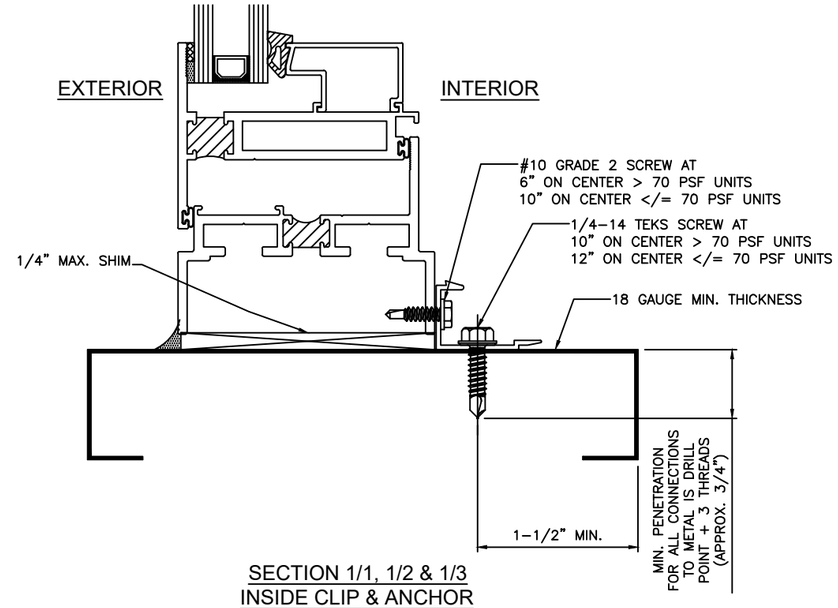

SECTION 1/1, 1/2 & 1/3
INSIDE CLIP & ANCHOR
TO STEEL STUD

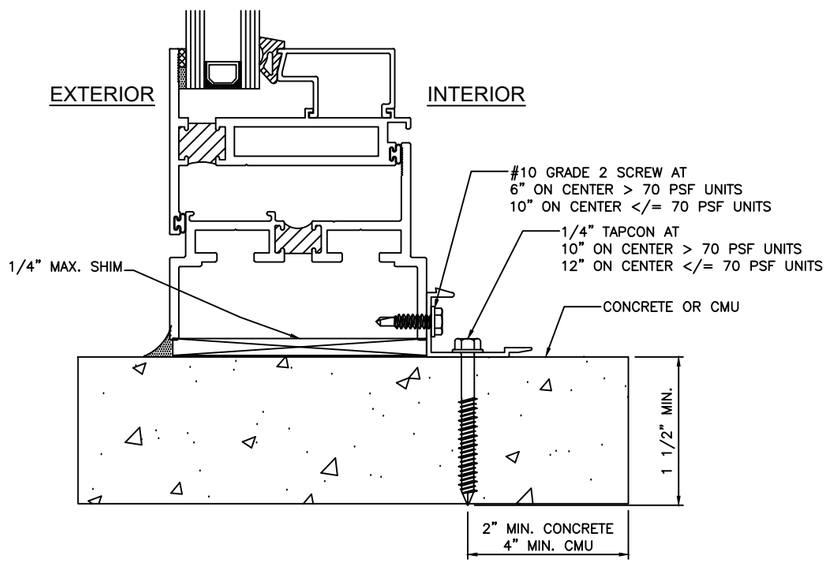

SECTION 1/1, 1/2 & 1/3
INSIDE CLIP & ANCHOR
TO CONCRETE OR CMU

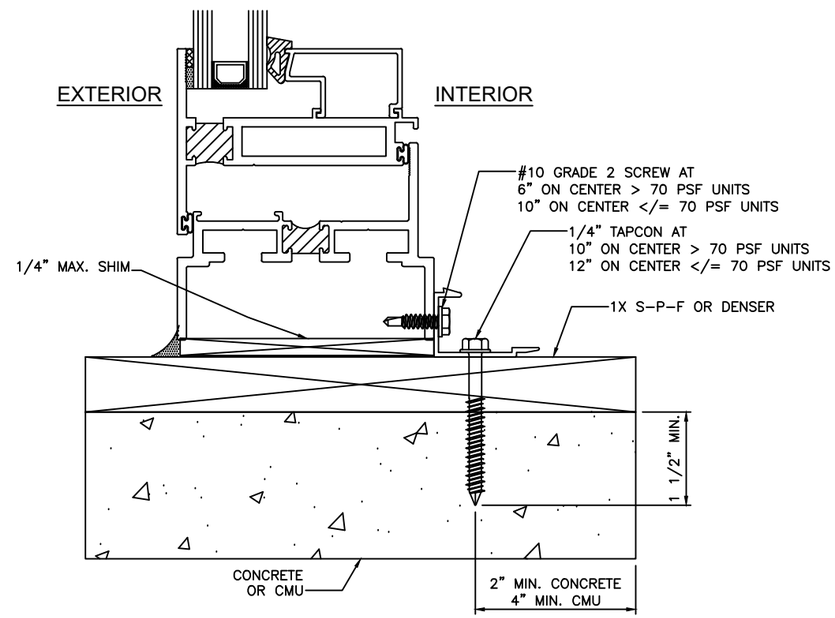

SECTION 1/1, 1/2 & 1/3
INSIDE CLIP & ANCHOR
TO CONCRETE OR CMU
WITH 1X BUCK STRIP

TANYA A. DOLBY
LICENSE
No. 93536
STATE OF
FLORIDA
PROFESSIONAL ENGINEER

Digitally Signed by: Tanya Dolby

9/18/2025 8:05 AM

Tanya A. Dolby, PE
FL PE 93536
FL REG 29274
130 Derry Court
York, PA 17406
717-764-7700

Project S8002.01

Win Vent
Architectural Windows
2401 South Main Street
Fort Scott, KS 66701
www.winventwindows.com
Phone: (800) 295-3113
Fax: 620-223-1139

Contact Info

Customer

REVISIONS

DATE	NO.	DESCRIPTION	REV BY
	1	REVISED FOR 2020 FBC	JAR
7-18-25	2	REVISED FOR 2023 FBC	REM
	3		
	4		

Project Name
SERIES 600 FLORIDA PRODUCT APPROVAL

Supplier
Win-Vent Architectural Windows
2401 S. Main Street P.O. Box 430
Fort Scott, Kansas 66701

Installation Details

DRAWN BY	WIN-VENT JOB #
JAR	N/A
DATE	SCALE
01/18/21	NONE

SHEET
4 of 5

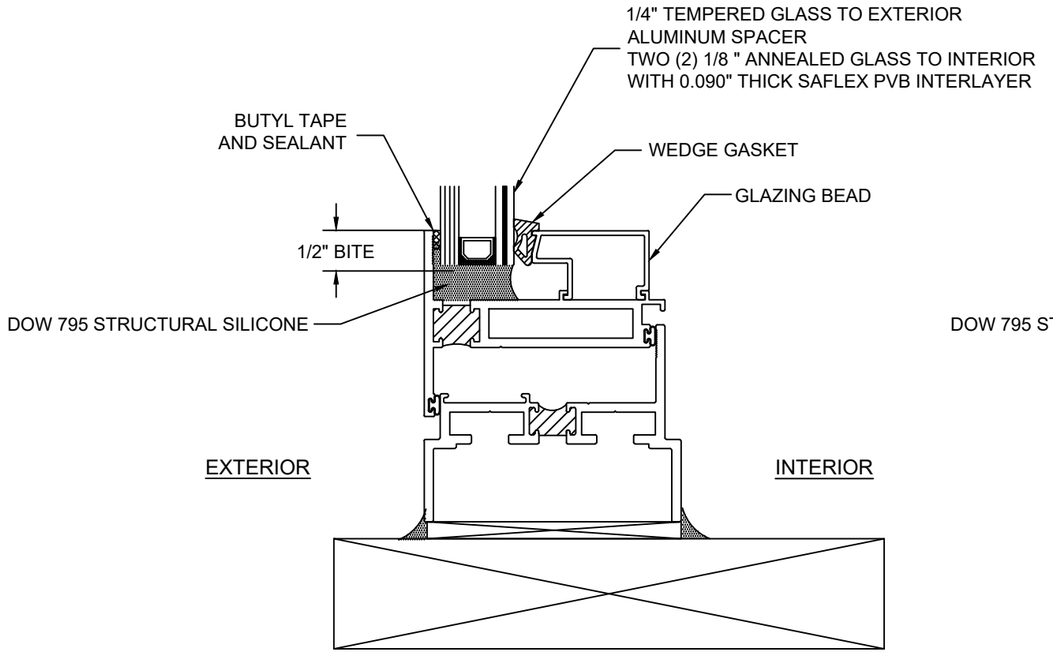

INSULATING GLASS GLAZING DETAIL

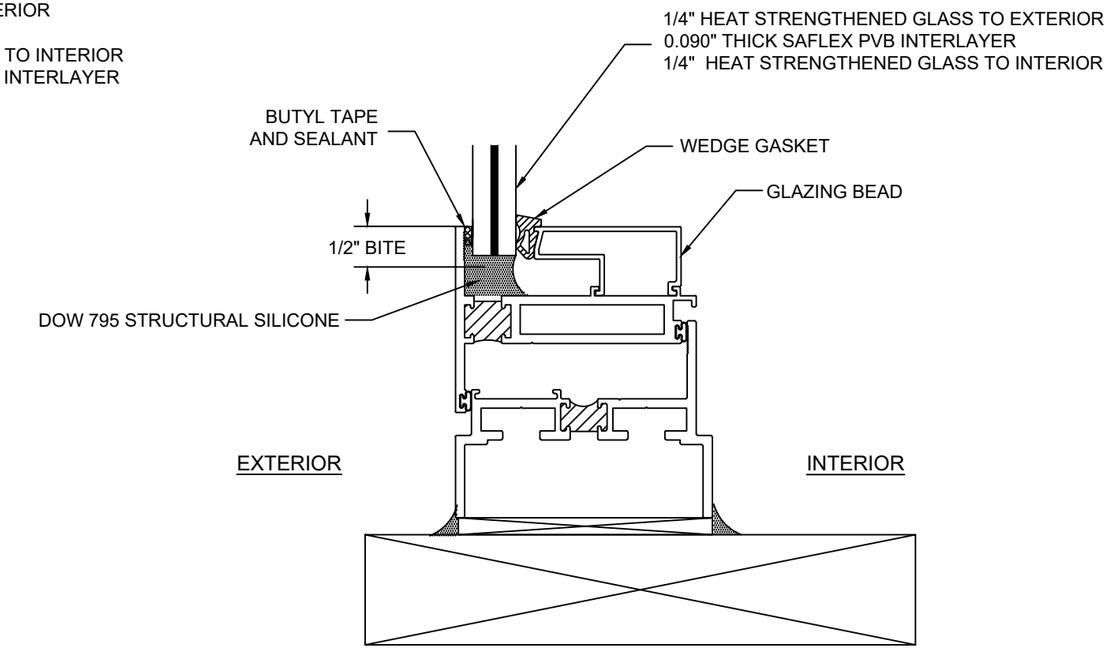

MONOLITHIC GLASS GLAZING DETAIL

TANYA A. DOLBY
LICENSE
No. 93536
STATE OF
FLORIDA
PROFESSIONAL ENGINEER

Digitally Signed by: Tanya Dolby

9/18/2025 8:05 AM

Tanya A. Dolby, PE
FL PE 93536
FL REG 29274
130 Derry Court
York, PA 17406
717-764-7700

Project S8002.01

Win-Vent
Architectural Windows
2401 South Main Street
Fort Scott, KS 66701
www.winventwindows.com
Phone: (800) 295-3113
Fax: 620-223-1139

Contact Info

Customer

REVISIONS

DATE	NO.	DESCRIPTION	REV BY
	1	REVISED FOR 2020 FBC	JAR
7-18-25	2	REVISED FOR 2023 FBC	REM
	3		
	4		

Project Name
SERIES 600 FLORIDA PRODUCT APPROVAL

Supplier
Win-Vent Architectural Windows
2401 S. Main Street P.O. Box 430
Fort Scott, Kansas 66701

Glazing Details

DRAWN BY	WIN-VENT JOB #
JAR	N/A
DATE 01/18/21	SCALE NONE

SHEET 5 of 5